WHAM

NEWS, VIEWS and REVIEWS

Official Publication of the
Wichita Historical Aircraft Modelers, SAM 56, and the
Kansas Sunflower Squadron, FAC Squadron #23

Sunflower Squadron
Wichita, KS

Issue JE2-28
June 6, 2026

A Look at the 1950 K&B .049 Torpedo

When one looks at early nostalgia airplane designs, one can't help but notice the K&B.049 is shown on many plans such as the Mini Hogan, Zeek, Kiwi, Fu-bar, Sioux, ½ Wild Goose, JASCO Skipper and PAA Master. Why, mostly because at that time it was just about the best .049 engine available. It was the first .049 to have dual bypass porting as found in the Cox engines that were still two years away. Contemporary engines, except for the O.K. Cub with its patented three port induction design, were of the over and under type of intake porting. This type of porting was first seen in the Arden engines of 1946. Functionally it worked in the following order, the piston's downward movement uncovered the exhaust, and as it moved further downward, uncovered the intake port.

The .049 Torpedo was at the end of an evolutionary chain of the two K&B engines that proceeded it. The advent of the glow plug made the very first engine, the 1949 K&B .020 Infant (note – it is not a Torpedo) possible. It was the first small engine on the market and intended to replace rubber as the motive power for kids. It was no powerhouse and not intended to be. It sold well and K&B struggled to meet demand. K&B followed with the .035 Torp Jr. in a quest for more power. At the same time the term 1/2A was was decided upon and a .049 displacement was locked down as the top of the class. In September 1950 K&B introduced the enlarged .049 version. It had all the experience gained from the two previous engines incorporated into the design. It had a ball/socket rod and piston assembly, where the first 5000 early .020 Infants used a huge 3/32" wrist pin that caused rapid wearing of the piston/cylinder.

The K&B .049 Torpedo has a larger .218" o.d. crankshaft with a .140" port and passage through it giving good breathing capability to its twin ports. An aluminum collar between the cylinder base and the crankcase of .075", set the port timing, the collar affects compression ratio and charge velocity. This thickness will vary a few thousandths between engines and may have to be changed to suit varying production tolerances. Only the .049 had a std. screw-in glow plug. Both the .020 and the .035 required a special captive glow plug held in place by their alum. screwed-on cyl. muffs. Their small displacements would not tolerate much variation in plug cavity volume, internal configuration or heat range. Once again I have found through extensive tests that the OEM glow plug seems to work the best. The Fox, Fireball, etc. plugs can drop the RPM by as much as 2000 and make the engine fussy to deal with all around. The std. K&B short is the best replacement and will give identical or better results than the original. These, too, are now seemingly out of production.

On the down side, the piston/rod assy. can develop some slop with time and can be tightened up by carefully peening the collar only with a 3/32" dia. punch. Don't hit the ball/socket. I use a Cox resetting tool holder to maintain the piston while doing this operation. The quality of the piston/cyl. assy. is not as good a fit as of a similar Cox assy. I wish it were. I think it would make an appreciable difference in performance.

An unusual feature of these engines is that the bar stock venturi is inserted downward almost through the bottom of the crankcase. As such, the .218" dia. crankshaft passes through the center of the of the .250" dia. venturi. Thus, the crank holds it in place and becomes a significant part of the main bearing right at the rotary valve location. I have opened up the venturi at the crank location to as much as .155" with generally good results. You must open the crank port to match to get the most from this operation. All the threads in these engines are 40 pitch. Yes, I know they are straight threads and not tapered but I use Teflon pipe tape on them all during assembly. The back plate is most important to get a good fit to seal in the base compression. The mounting ring, back plate and needle valve are the same for all 3 K&B engines. The engines I get have always had the mounting ring drilled from its 3-48 hole size to seemingly 10-32. The head and / or cyl. has always been attacked by pliers. With a lathe you can clean up some of this abuse.

The drive washer can be removed by squeezing in a vice. Place the crankcase in a smooth jaw vice and push between the front of the crank and the aft side of the case. Use thin sheets of plywood to protect the engine if the vice jaws are not the smooth type.

I usually put a .008 thick brass shim washer behind the drive washer to stop the loose fore and aft movement of the crank in the case. This generally gives a clearance of about .002" fore and aft. Re-assemble the d/w by tightening a prop on the engine. Use oil on the assy. to ease the process.

All glow plug washers measure about .030. Going to .010 to .020 can give you 300 to 400 more RPM. The bypass ports are fairly small in cross section and the thickness of the cylinder base is thin. There is not enough material to give this engine a port like found on a Holland Hornet. A supplementary end mill pass at each side of the existing port, such as is done on a Cox Tee Dee cylinder, would be *a vast help as this is the big bottleneck in the flow of mixture* through the engine. I am not good enough to get that done. I just think about it a lot.

These engines are not as common as others as they were only produced for three years before being replaced by the K&B Allyn Sky Fury .049. Most examples I have gotten are terribly abused. What's with these people anyway? The good news is that since they are a bar stk. product, they can be repaired. I file the sides of the crankcase with a mill smooth and kerosene to remove the ravages that people wrought on these poor things. The engine can come out looking new. I have a set of the original wrenches for the engine, but they can be made from .063" sht. steel except for the head with its two tangs being required. That is a bit tough to make with a saw. All ½ A engines have a hardened piston running in a softer 12L14 Leadalloy cylinder. The piston can wear and show scratches, but it's the cylinder that catches most of the wear. Most of the K&B engines I come across are badly worn in the p/c dept.

I have honed cyls. using a length of .406 drill rod and fine valve grinding compound to get a nice true bore. You then shift to jeweler's rouge and work for a finer finish in the bore. I then take an AN-7 aircraft bolt or an automotive 4 to 6 point 7/16" bolt and machine it to within .001 over my bore size. You counter bore the bottom end and leave a ledge to support the .078 wrist pin. A custom rod will have to be made to complete the assy. Measure from the top of the original piston to the top of the crank pin bore in the rod and match that exactly with your new parts. Drill the holes for the wrist pin to obtain the above dimensions. Locate the wrist pin from ½ to 1/3 of the way to the top of the piston. Take .078 drill rod or music wire and make a wrist pin to suit. I make it just short enough to clear the bore and pinch one end in a vice just enough to make it a force fit into the piston. A bit of Loctite 620 is applied to both ends also. This stuff is good to 490 degrees. Bring the piston into final fit with the cylinder using a Roger Schroeder type of lapping fixture. This is a metal plate about ½" thick with a .406+ hole through it. Four slight saw or file cuts are made at 90 degrees to each other around the hole. A generous saw cut through in one place only to accomplish these cuts will allow the hole to be tightened as you rotate the piston inside this hole. A 3/16" to ¼" dia. hole edgewise through the saw cut will allow a bolt to be utilized to compress the fixture to a smaller size as the piston is lapped to fit. Use fine garnet or jewelers compound for this function and stop when the piston just starts to fit into the bottom of the cyl. bore. Scrub everything well with hot water and soap and assemble the engine with Rislone oil additive from the auto supply store. When fired up the engine will put out gray exhaust residue for about 1 minute. It should then clear to amber, and the compression should be better than before. I have found these engines to now go to 14,000 RPM after this rework.

Performance of these engines vary mostly I believe due to the piston / cylinder fit. I adopted a standard prop and fuel for all my .049 testing. A standard atmosphere day is also considered in the testing. I use a Cox 5-3 gray rigid prop and 10 % nitro / 28% oil fuel. Nitro increases up to 25% give about 3-400 increase in RPM. Nearly all of my engines produce 13,200 with some less and some more. The Cox identical mold prop of black nylon can drop the output to 12,000. I'm not sure what's happening, but the prop may be opening up in pitch. APC veg-a-matic props give very little increase and can sure cut you up. With their smaller blade area, they do not produce the same amount of thrust as the Cox prop.

As a parting shot, I will tell you that while reading a 1951 Top Flite ad in Air Trails, listed were all the winners using Top Flite props at the nationals that year. Here was a jr. 1/2A ROW winner using a Torp .049 WITH a Cox glow head. This being the early type used on the Space Bug et al. The 1956 and later doesn't work. This head screws right into the K&B and can sometimes raise the output significantly. It doesn't look good as it doesn't fair in with the cyl. It isn't legal in early NOS, but it was an eye opener.

The very best, Bill Schmidt

March 28, 2026, Meeting Minutes

ATTENDEES:
Jeff Englert, Linda & Chuck Powell, Marlene Hayes & Ed Salguero, Marilynn & Bill Schmidt,

President Powell called the meeting to order, Minutes were approved as reviewed.

Club assets remain positive.

OLD BUSINESS:

The Indoor Contest was discussed. Fun times in Wellington.

NEW BUSINESS:

Outdoor WHAM contest May 1 & 2 at Marion Airport

SHOW AND TELL:

Chuck Powell showed a Sterling Cirrus glider An 87" stick and tissue monster, Chuck built it as a static display because it was an un-completed model. Covered in silkspan and white dope.

Bill Schmidt brought in his **Vought SB2U Vindicator** is an American carrier-based dive bomber developed for the United States Navy in the 1930s, the first monoplane in this role. Vindicators remained in service at the time of the Battle of Midway, but by 1943, all had been withdrawn to training units. It was known as the **Chesapeake** in Royal Navy service.

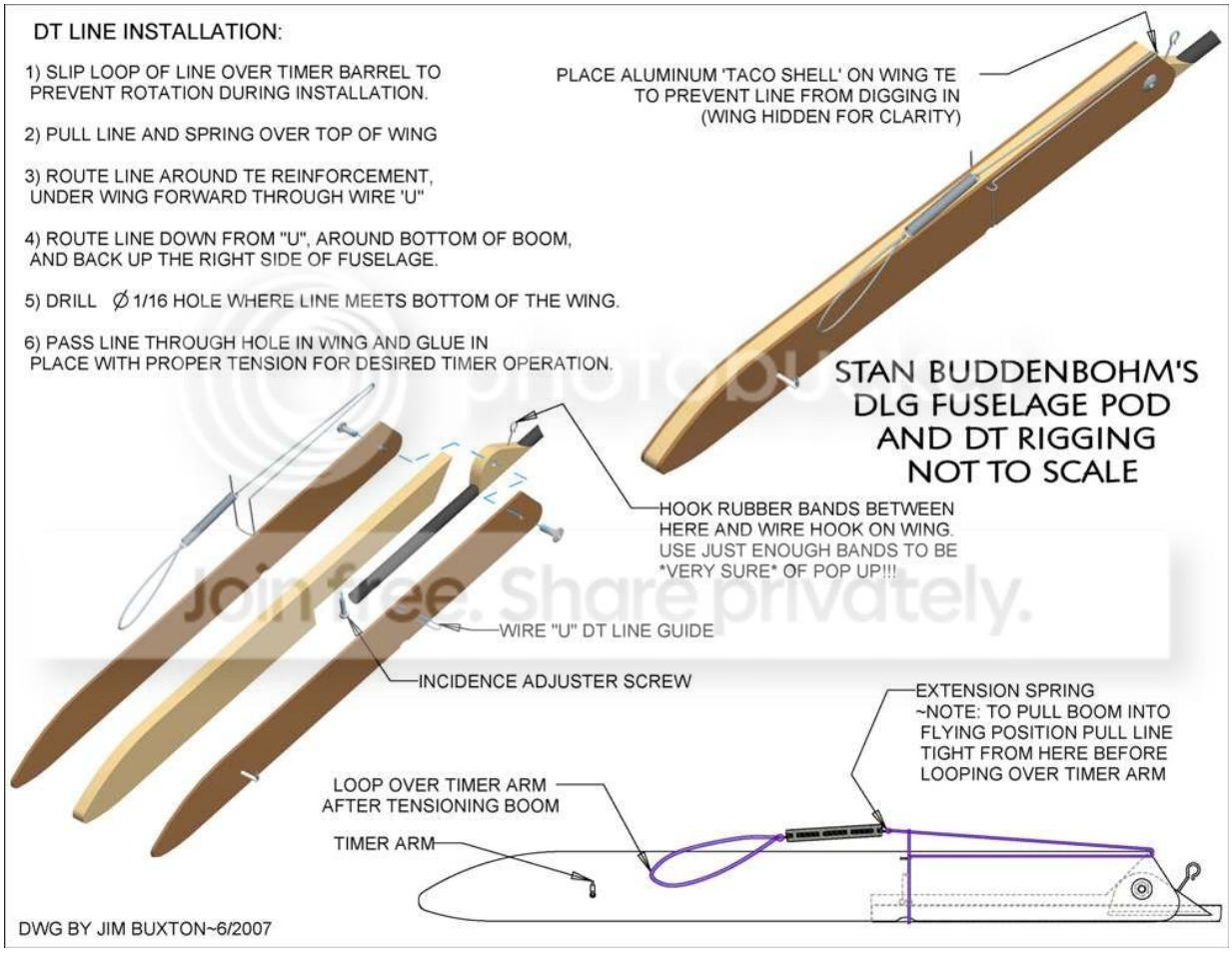

WHAM – News, Views and Reviews

Jeff Englert
10118 Sterling Court
Wichita, KS 67205

The next SAM 56 Dinner Meeting will be at:

Mediterranean Grill

335 S Towne East Mall Dr., Wichita, KS 67207

(316) 651-5599

Saturday, June 13, 2026

Social Hour @ 7:00 PM, Dinner @ 7:30 PM...

Note – The meeting starting time has been delayed an hour to allow the restaurant to clean their meeting room from a previous group

Membership Information:

Open to all interested AMA members, founded to encourage and promote the model airplane building hobby.
Member dues ~~$20~~ (not this year!) annually, Subscription only; $12 annually, $18 foreign.

Send checks Phil Burress, 4757 N. Steeds Crossing, Park City, KS 67219

All memberships and subscription renewals are due January 1st of the new year.

Club Officers:

President: Chuck Powell, Vice-President: Marty Kline
Treasurer: Phil Burress, Secretary: Jeff Englert, 722-7491

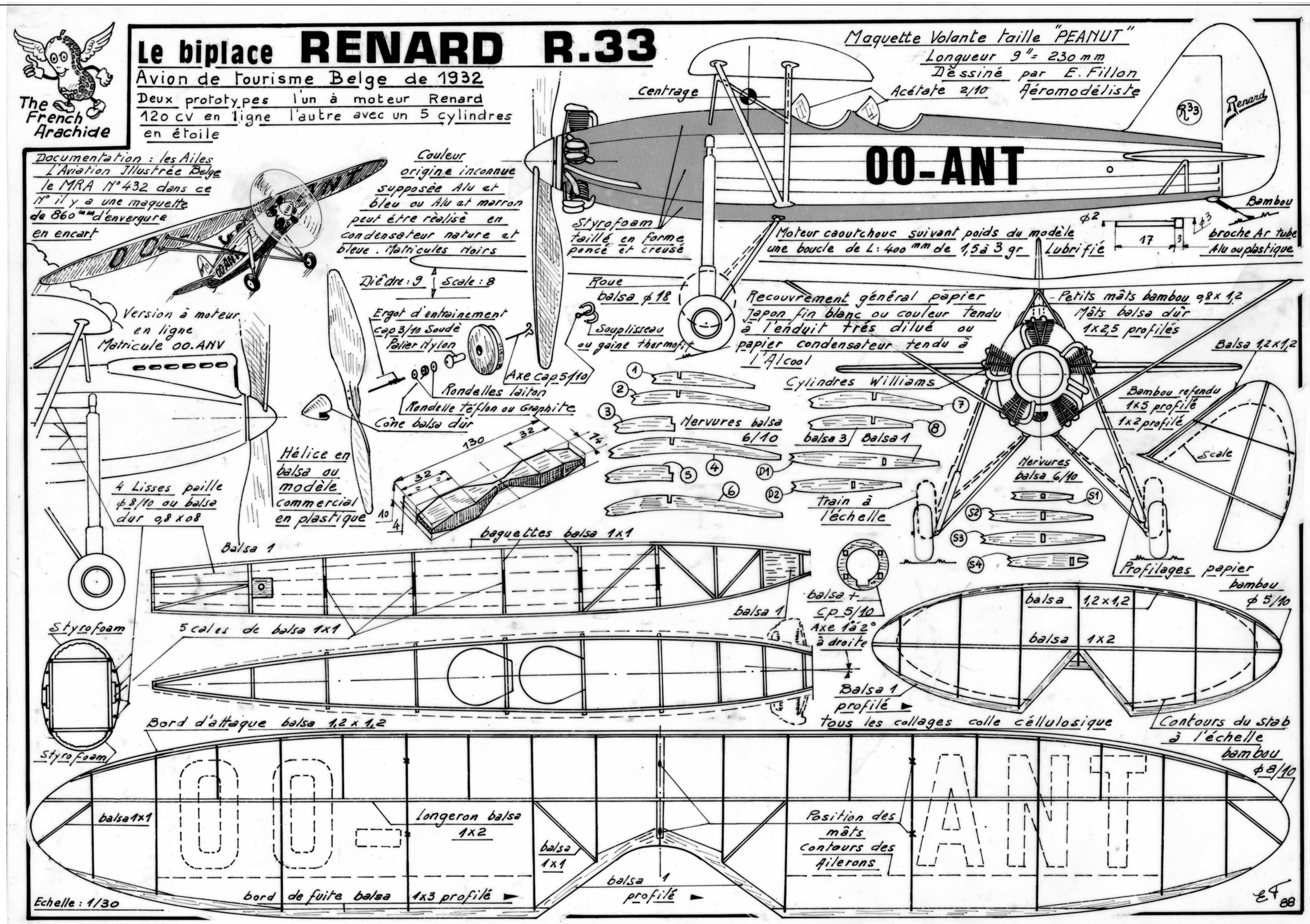

The French Arachide
Le biplace RENARD R.33
Avion de tourisme Belge de 1932
Deux prototypes l'un à moteur Renard 120 cv en ligne l'autre avec un 5 cylindres en étoile
Maquette Volante taille "PEANUT"
Longueur 9" = 230 mm
Dessiné par E. Fillon Aéromodéliste
Centrage
Acétate 2/10
Renard
R33
OO-ANT
Bambou
Documentation : les Ailes l'Aviation Illustrée Belge le MRA N°432 dans ce N° il y a une maquette de 860 mm d'envergure en encart
Couleur origine inconnue supposée Alu et bleu ou Alu et marron peut être réalisé en condensateur nature et bleue. Matricules Noirs
Styrofoam taillé en forme poncé et creusé
Moteur caoutchouc suivant poids du modèle une boucle de L: 400 mm de 1,5 à 3 gr Lubrifié
ϕ2
ϕ3
17
3
broche Ar tube Alu ou plastique
Diêdre : 9
Scale : 8
Roue balsa ϕ 18
Souplisseau ou gaine thermofit
Recouvrement général papier Japon fin blanc ou couleur tendu à l'enduit très dilué ou papier condensateur tendu à l'Alcool
Petits mâts bambou 0,8 x 1,2
Mâts balsa dur 1x2,5 profilés
Balsa 1,2 x 1,2
Version à moteur en ligne Matricule OO.ANV
Ergot d'entrainement cap 3/10 Soudé
Palier Nylon
Axe cap 5/10
Rondelles laiton
Rondelle téflon ou Graphite
Cône balsa dur
Cylindres Williams
Bambou refendu 1x5 profilé 1x2 profilé
Nervures balsa 6/10
balsa 3
Balsa 1
Scale
Hélice en balsa ou modèle commercial en plastique
130
32
14
32
10
4
Train à l'échelle
Nervures balsa 6/10
4 Lisses paille ϕ 8/10 ou balsa dur 0,8 x 08
Balsa 1
baguettes balsa 1x1
Profilages papier bambou ϕ 5/10
balsa + cp 5/10 Axe 1 à 2° à droite
balsa 1
balsa 1,2 x 1,2
balsa 1x2
Styrofoam
5 cales de balsa 1x1
Balsa 1 profilé
tous les collages colle céllulosique
Contours du stab à l'échelle bambou ϕ 8/10
Bord d'attaque balsa 1,2 x 1,2
Styrofoam
OO-ANT
balsa 1x1
Longeron balsa 1x2
balsa 1x1
Position des mâts contours des Ailerons
balsa 1 profilé
bord de fuite balsa 1x3 profilé
Echelle : 1/30
88

BOTH PLANES ALIKE

15/16" SCALE 5/8"

RIBLETS

AILERON CABLE R.PT.

AILERON OUTLINE

AL TUBE

+1/8" WASH OUT

LEADING EDGE 1/16 x 3/32

1/16 SH ROOT RIBS

ALL OTHER RIBS 1/32 SHEET

STRUT FIX POINT

FRONT SPAR 1/16 x 3/16

REAR SPAR 1/16 x 1/8

GUSSETS

1/32"

LAM 3X 1/32 x 1/16 ℄ BLEND IN

BLOCK UP LE ℄ TE 1/32" WHEN BUILDING TO PROPERLY MEET RIBS, TIPS UP 1/32" ALSO, ℄ WARP IN 1/8" WASHOUT AT RIB # 14

TRAILING EDGE 1/8 x 1/16

RED WHITE BLUE WHITE 1/32"

CABLE HORN ℄ BAL CABLE

LAM TIPS 2 x 1/32 x 3/32 TO AILERON ℄ 2 MORE TO T.E ℄ BLEND IN SMOOTHLY

PITOT

TIP SKID

AILERON CONTROL CABLE

BOTH BAYS: SINGLE LANDING ANGLE BRACING WIRES 3/32 FLYING WIRES 3/32 APART BOTH SPAR POSITIONS INCIDENCE WIRES AT INTERPLANE STRUTS

PIN INTO FIX POINT TYPICAL

PITOT

INCIDENCE WIRES

INTERPLANE STRUTS

5/16 x 1/16 STREAMLINED

1/32 TIP SKID

METAL FITTING

3/32

1/16 ALUM TUBE FOR PIN DIHEDRAL JOINT REINFORCEMENT

VISION PANELS

FAIRING @ COMPASS

BLACK METAL STRAP CONNECTORS TOP ℄ BOTTOM

AL TUBE

LOWER SECTION SHOWN BROKEN LINE

SUGGESTED ENLARGEMENT

RP

R.P.

PIN INTO FUSELAGE

1/16 x 1/8

PIN

CAREFULLY SAND TO LIFTING AIRFOIL WITH SHARP LEADING EDGE

PAPER TUBE AT RIGGING PT (RP)

1/32 x 1/8 RIBS

1/16 x 1/8

GUSSETS

HORN

COPPER WIRE HINGE

2 LAMS 1/32 x 1/16

SUGGESTED MOTOR USING REVERSE S HOOK ON PROP SHAFT. 8 TO 12 STRANDS OF 1/4" TO FORM 4 TO 6 LOOPS 24" TO 28" LONG. PLAIT/BRAID TO FINAL LENGTH OF 12 TO 12 1/2".

CUT 4 PROP BLADES FROM PLASTIC BOTTLE, TIP TILTED APPROX 18° LEFT OF HUB. EPOXY INTO 45° SLOT IN WOOD HUBS ℄ SHAPE HUBS TO BLEND INTO BLADES, BALANCE ℄ PAINT WOOD COLOR.

APPROX SCALE BLADE, COPPER CLAD L.E.

ROLL WIRES DIAGONAL BRACING BETWEEN THESE

1/8 x 1/16

1/16 ℄

1/16

PINS INTO FIX POINTS

LAM 1/20 TO BOTH SIDES 1/64 PLY ℄ STREAMLINE.

BOND PAPER STRAPS BLACK

1/8 ℄ AXLE STRUT 3/32 ℄ SPREADERS

HALF LAP 5/16

1/32 PLY

3° DOWN 2° RIGHT THRUST

L.G. LEGS ℄ LOWER PLANE CABANE STRUTS

3/32 BRASS TUBE PROP SHAFT BEARING WITH FREE WHEELING BOSS ON END.

ELEVATOR CONTROL HORN

1/32 SHEET

3/32 x 3/32 LONGERONS

1/32 SHEETING

3/16 NOSE BLOCK KEY

VISION PANEL ON BOTTOM

SCARFF RING

1/16 x 3/32 THREAD

RUDDER CABLE

RUDDER/FIN AIRFOIL

RUDDER HORN

STREAMLINED BLISTER

BOTTOM LOUVERS ℄ OPENINGS

AIL CAB

OPTIONAL OPEN SIGHT

BEAD SIGHT

COAMING

WIRE BRACES TO STAB

1/32 PLY

3° DOWN 2° RIGHT THRUST

1 2 3 4

3 SHORT EXH STACK B1152

AILERON HORN ℄ CONTROL CABLES

COMPASS

ELEVATOR CABLES

TWIN LEWIS GUNS ON SCARFF RING MOUNTING

BLACK 1/32 ℄ STRUTS

1/16 CENTER POST HANGER BRACKETS

BOTTOM CUT ON CTR POST SETS POSITIONS OF SKID

PIECE OF FLAT TOOTHPICK RUDDER/FIN WIRE BRACING RIGGING POST ℄ AT BOTTOM DORSAL ALSO

B1152

2 LAMS 1/32 x 1/16

1/16 SH RIB

1/32 x 1/8 RIBS

1/32 RIBS

BLUE WHITE RED

1/16 x 1/8 HORN

HINGE

ELEV HORN

1/16 RIB

1/32 SH RIBS

COPPER WIRE HINGE

PROFILE 2 LAMS 1/32 x 1/16

1/32 SHEETING

DRAG WIRE

STRINGER

COWL

FILL CAP

SHELL CHUTE

SHORN STACK

DARK RUST COLOR

1/32 SHEETING

FLYING WIRES

1/32 SH

BRACKET

AIL CABLE EXIT

ELEV CONTROL HORN

STEP BOTH SIDES

AIL CABLE

AILERON HORN ℄ CONTROL CABLE

BALANCE RANGE

3/32 x 3/32

1/16 x 3/32

THREAD

WHITE BLUE WHITE RED

3/8 x 3/32 MOTOR PEG

RUDDER CABLE

ELEVATOR CABLE

1/32 STRUTS ELASTIC CORDS

3/32 x 1/20 WOOD TAIL SKID, CHAMFER EDGES

METAL SHOE BLACK

3/16 x 1/16 STREAMLINED TO 3/32 x 1/16 OVALED CENTER POST

HANGER BRACKETS BLACK

REFERENCES:
1- PROFILE PUBLICATIONS, NO 21, THE BRISTOL FIGHTER
2- DRAWINGS BY MR. G.A.G. COX PUBLISHED OCT 1957 AERO MODELLER MAGAZINE

FUSELAGE FRAMING: 3/32 x 3/32 LONGERONS 1/16 x 3/32 INTERMEDIATE X GRAY THREAT X BRACING CENTERED ON MEMBERS

1/32 SH

KEYWAY

3/32 SH FORMERS

1 2 3 4

SHOCK CORD

3/32 ℄ FRONT ℄ REAR SPREADER BARS ℄ 1/8 ℄ AXLE STRUT

STEEL TUBES BLACK

DRAIN COCK

AIR SCOOP

BALSA BLOCK COWL

1/16 SH

EXH STACK

CABANE STRUT

OPEN TO BREECH

WOOD PROP

1/16 FORWARD

1/32 SH INST PANEL

RELIEVE TO CLEAR STRUT

GENERATOR BLACK

VALVE ACCESS

SUBJECT A/C DOES NOT INDICATE WING TANK

FUEL LINE

ROLL WIRES @ FRONT CABANE STRUTS

SCREEN

VICKERS GUN

PORT

VENT OPENING

SHUTTERS

EXH STACK

SCREEN

LOWER CABANE ROLL WIRES

WIRE BRACING BETWEEN FRONT LEGS

LAMINATED BALSA WHEELS TURNED TO SHAPE ON LATHE TURN FILE BEARING EYELET RETAINER

DRAG WIRE TO FRONT SPAR

CABANE STRUTS 1/8 x 1/16 BASS WITH PIN & GLUE CONNECTIONS

WIND DRIVEN GENERATOR

AIR SCOOP

MODEL DEPICTED SIMILAR MARKINGS TO REF #1, BRISTOL F.2B, ROLLS-ROYCE 275 H.P. FALCON III., NO. 22 SQD'N, R.A.F., VERT GALAND, 1918.

COLORS: TOPS OF BOTH WINGS, HORIZONTAL TAIL PLANE, TOP ℄ SIDES OF FUSELAGE, FIN ℄ WHEEL COVERS - "WET" KHAKI

UNDERSIDES, NATURAL LINEN

FRONT (SHEETED) PORTION OF FUSELAGE ℄ RADIATOR - ALUMINUM

LANDING GEAR ℄ INTERPLANE STRUTS, LIGHT WOOD COLOR (ALTHO REF #1 SHOWS L.G. KHAKI, DETAILS INDICATE STEEL TUBES, PAIRED WITH WOOD ℄ TAPED, ∴ PROBABLY PAINTED KHAKI)

UPPER ℄ LOWER CABANE STRUTS ℄ MISC FITTINGS BLACK

BRACING WIRES ℄ CABLES SILVER

B1152 ON FIN BLACK, CON FUSELAGE WHITE.

FLYING SCALE INC 1905 COLONY RD. METAIRIE, LA. 70003 ℄S	FSI
BRISTOL F2-B SCALE 3/4" = 1'-0"	PLAN B-6 SH 1 OF 1

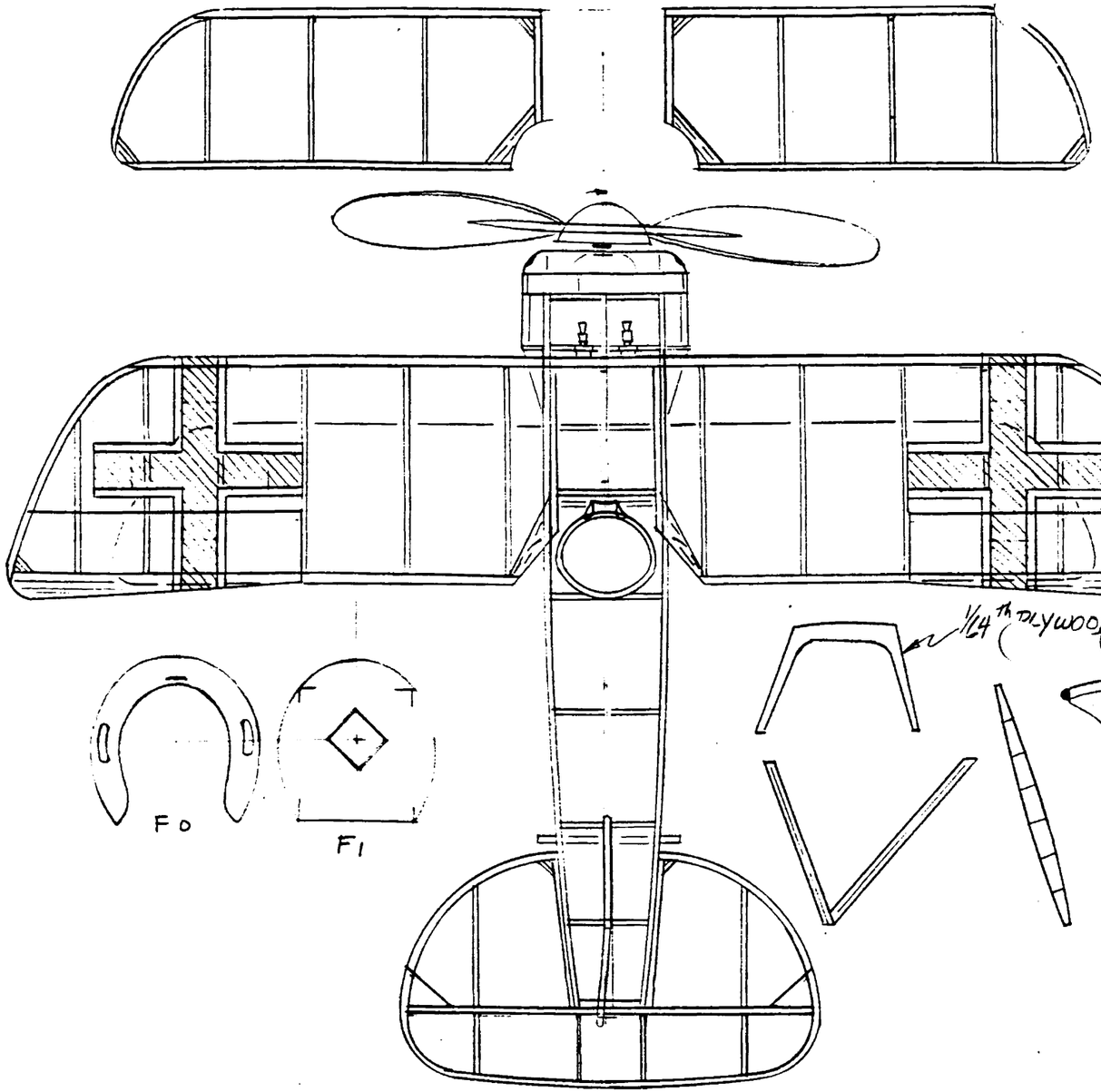

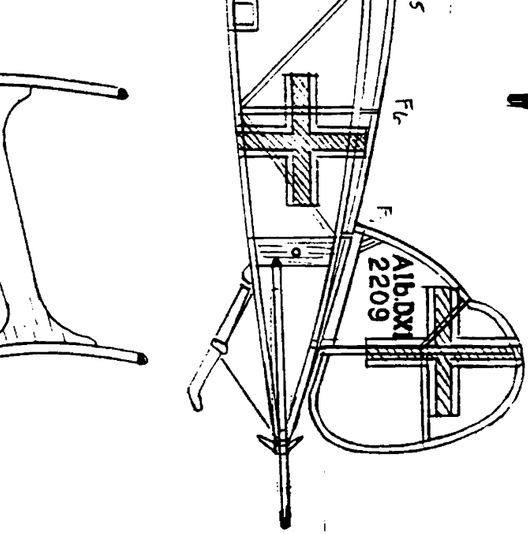

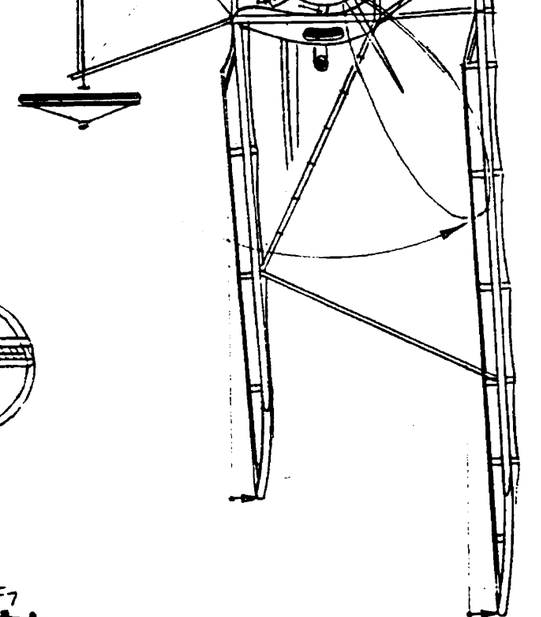

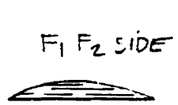



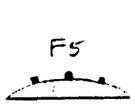

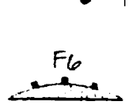



ALBATROS D-XI
PISTACHIO SCALE
BY PRES BRUNING
21 SEPT '93

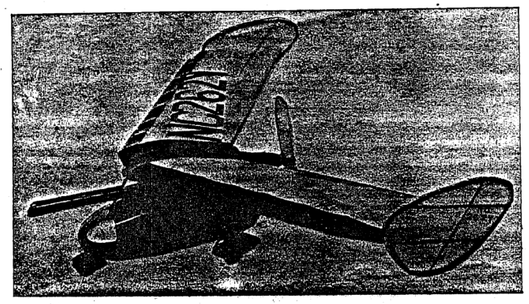

CONSTRUCTION NOTES

CONSTRUCT FUSELAGE FIRST. BEGINNING WITH TWO SIDES. MAKE SQUARE FRAMEWORK, ADD ON ALL FORMERS. THEN PUT ON NOSE, REAR BLOCKS AND STRINGERS. CARE SHOULD BE TAKEN IN CONSTRUCTING THE FUSELAGE, AS IT IS A BIT TRICKY, BUT SIMPLE IF THE PLAN IS FIRST STUDIED CAREFULLY. BUILD THE WING AND RUDDERS ACCORDING TO THE PLAN, USING PARTS FROM THE PRINTED PIECE. START WITH THE WING OUTLINE FIRST, AND WHILE THAT IS DRYING, CUT OUT THE RIBS FROM THE PRINTED PIECE. WHEN THE OUTLINE IS DRY RAISE IT UP, ON THE PINS THAT FASTENED IT DOWN TO THE PLAN, TO THE PROPER HEIGHT AND SLIP IN THE RIBS. WHEN THE WING IS DRY, PUT IN THE PROPER AMOUNT OF DIHEDRAL AND CEMENT IN THE TOP CENTER SPAR. COVER ALL PARTS SEPARATELY BEFORE ASSEMBLING MODEL.

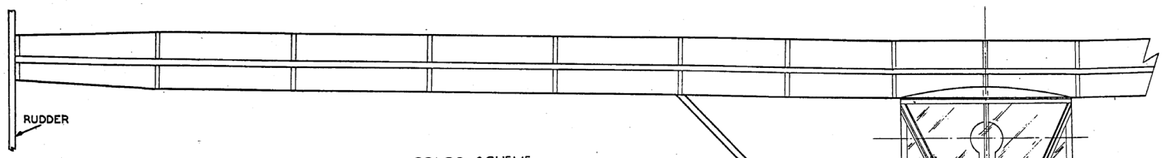

COVERING NOTES

COVER ALL PARTS WITH GRAIN OF PAPER RUNNING LENGTHWISE, WATCHING OUT FOR WRINKLES. ON ROUNDED SURFACES, COVER ONE SECTION AT A TIME, USING SMALL PIECES OF TISSUE PAPER. THE WING IS COVERED, USING A SEPARATE PIECE OF TISSUE FOR THE TOP AND BOTTOM OF EACH WING PANEL.

COLOR SCHEME

YELLOW:- WING AND RUDDERS
GREEN:- FUSELAGE, LEADING EDGE AND CENTER SECTION OF WING, LANDING GEAR STRUTS AND PANTS, MOTORSTICK

NOTE:- KIT IS INTENDED FOR FLYING MODEL, NO DOPE IS INCLUDED.

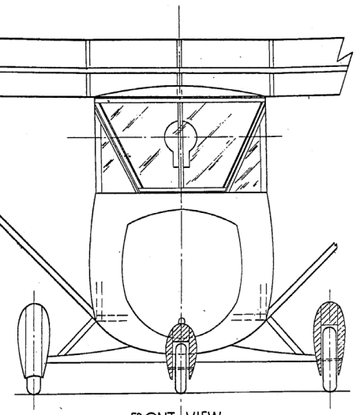

NOTE:- PROP SHAFT AND REAR HOOK, BENT FROM WIRE FURNISHED IN KIT

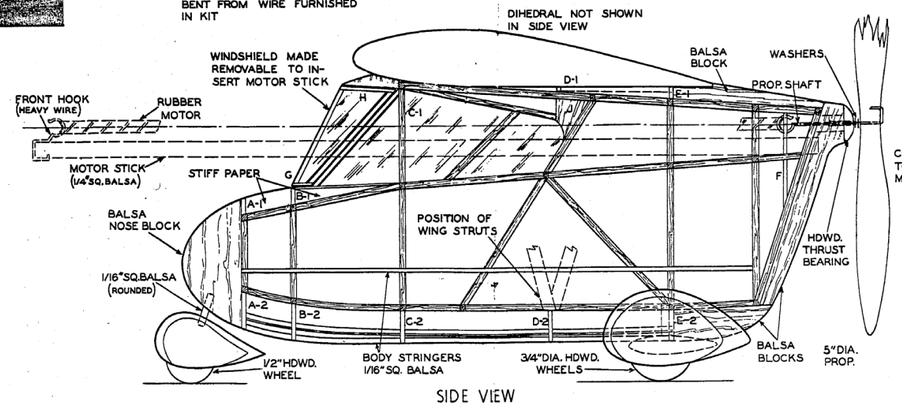

SIDE VIEW

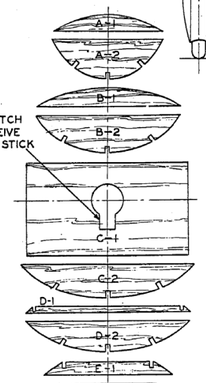

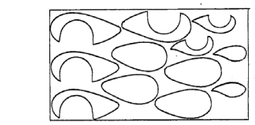

METHOD OF LAYING OUT PLANK FOR PANTS PIECES

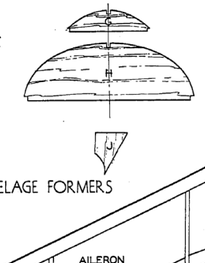

FUSELAGE FORMERS

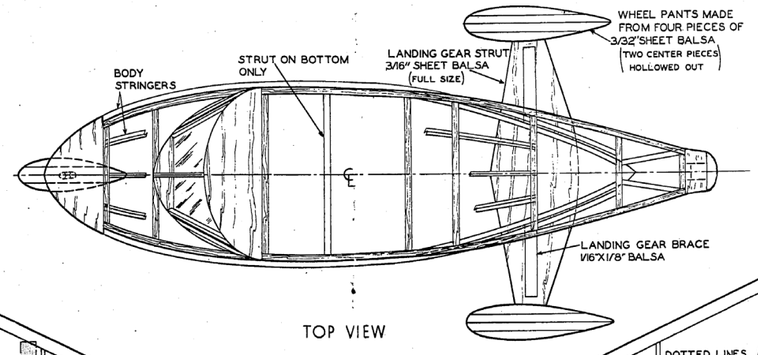

TOP VIEW

WING LAYOUT

FLYING NOTES
NO BALANCING WEIGHT NEEDED. ADJUST FOR FLAT GLIDE BY AILERONS. WIND MOTOR ABOUT 50 TIMES FOR SHORT POWER GLIDE. CORRECT ANY FAULTS WITH AILERONS.

MEGOW'S MODELS

WATERMAN ARROWBILE

WING SPAN 23 INCHES
KIT NUMBER C22

DRAWING FULL SIZE

MEGOW'S, PHILADELPHIA, PA., U.S.A.