WHAM

NEWS, VIEWS, and REVIEWS

Official Publication of the
Wichita Historical Aircraft Modelers, SAM 56, and
the Kansas Sunflower Squadron, FAC Squadron #23

Sunflower Squadron
Wichita, KS

Issue JE2-27
March 2026

ROCK SOLID THRUST BEARING SETUP

by Bill Henn

An article published in the July 2007 issue of Tailspin, Mike Nassise, Editor

Here's the way I put together my thrust bearings for rubber-powered airplanes, whether they are endurance models or FAC Scale ships. I use two Peck Polymers PA-7 nylon bearings which come with a .046" hole and a short length of 1/4"aluminum tubing. If I need a larger opening in the bearings, I drill them out so that they fit whatever size wire I have used to make up the prop shaft.

The small Peck bearings can also be used with 1/8" ID tubing, but they must be shaved or sanded down slightly. Their stock hole is .032" diameter, but again it can be drilled out to suit. By setting up your thrust bearings as shown in the diagram below, you end up with a very durable unit that gives wobble free prop shaft rotation since a larger section of the wire is firmly supported. As everyone knows, the steadier the prop runs, the better the flight. Yes, It takes a little more time and effort to build the unit, but the results are worth it.

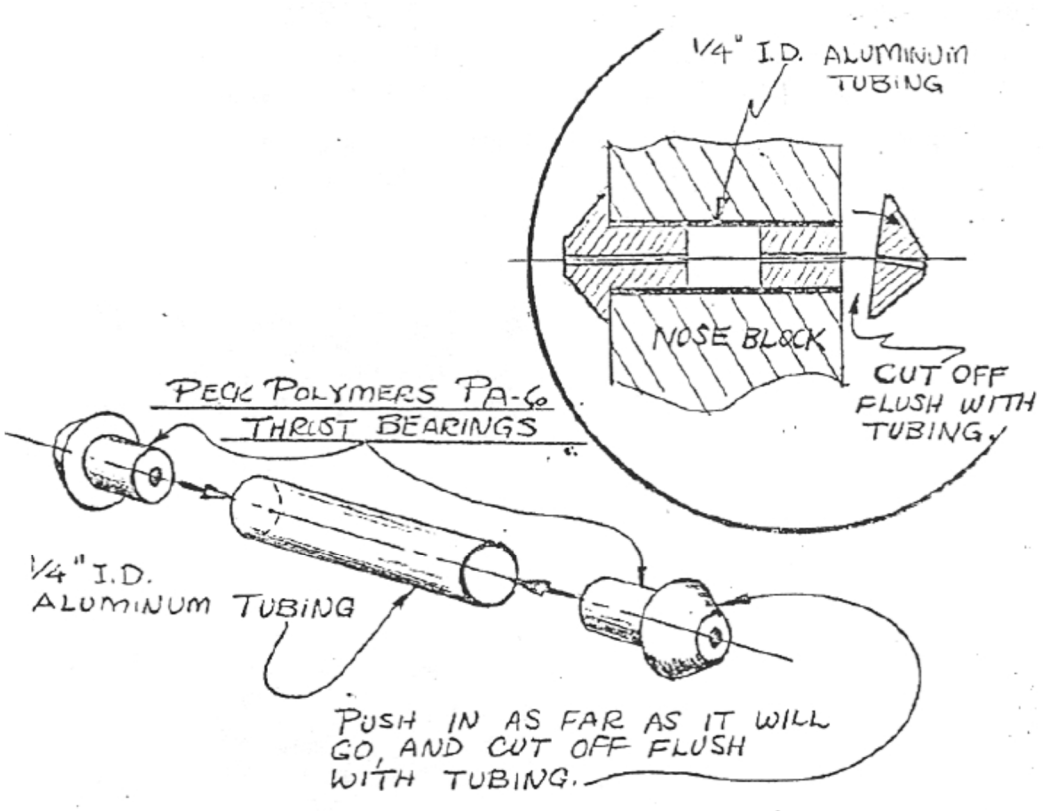

August 12, 2025 Meeting Minutes

ATTENDEES:

Don't know who made the meeting, I didn't – the few pictures show at least four attended.

President Powell called the meeting to order; Minutes were approved as delivered.

Treasurer's report reported a positive balance.

OLD BUSINESS:

Reviewed contests.

NEW BUSINESS:

Discussed the upcoming Indoor fly….

SHOW AND TELL:



Chuck Powell with new CLG -Push Cat 18



Ed Salguero with a Jabberwock



Dave Wiebe with a Culver Cadet



Bill Schmidt with his Cessna Coupe.

Wichita Historical SAM 56 Aircraft Modelers

FLYING ACES
Sunflower Squadron
Wichita, KS

The next SAM 56 Dinner Meeting will be at:

Mediterranean Grill

335 S Towne East Mall Dr., Wichita, KS 67207
(316) 651-5599

Saturday, March 28, 2026

Social Hour @ 6:00 PM, Dinner @ 6:30 PM...

Upcoming events:

Membership Information:

Open to all interested AMA members, founded to encourage and promote model airplane building.

Member dues $20 annually, Subscription only; $12 annually, $18 foreign

b0,6-papír tuš

4ks-b0,8-přilepit na přepážku č.6 ve spodní části

b0,8 podložka VOP

b1x3

b1x2

b1x1

ø100/180

1-2 3 4 5 6 7 8 9 10 11 12 13

vinklet b1,5

al.drát 0,5

ø16

kancel. papír

rozmetadlo

b2

al. drát ø0,8

bambus ø12

kšírovat

b1x3 b1x1

celá VOP b1x1

bambus ø1,5

b1,5

bambus ø1,5

celuloid 0,1

př.0,8

b4

b10

ocel.drát ø0,6

b1x3

nalomit 2ks-b1,5

4ks-b1,5

A B C D E F G H I

žebra Baž I - b0,6

b2x3,5

b1x4

I H G F E D C B A

b1x3

b1,5x5

b2

1 1a 2 3 4

b2

8 9 10 11 12 13

přepážky č.3 až 13-b0,8 (vždy 2 půlky)

nalomit

5 6 7

1986

Z-37T „Agro Turbo“

Konstrukce: Z. Raška

Kategorie: M-oř.

1913-2013

Centenaire de la traversée de la Méditerranée

Concours postal "Les Cahiers du CERVIA"

Morane - Saulnier type H

balsa 30/10

bloc vue face 1

bloc vue arrière 2

tube alu

ctp 10/10

2 x 5/10 + papier roulé fil en long

6,5

11mm

axe cap 7/10

coller

1 x 1,5 balsa dur profilé

10/10

15 10

15/10

1,5 x 1,5

position optionnelle de la broche

4 bambou 5/10

fil élastique

ligature

bambou

noir

vernis jaune

balsa dur profilé x1

hauban arrière

hauban avant

cap 5/10 + souplisseau

ligature fil

ligature élastique

noir

gris clair

Hélice : 120 mm max

cuivre

copper

yellow varnish

black

noir

vernis jaune

noir

VUE DESSUS

5/10

longerons noirs

VUE DESSOUS

5/10

noir

Les cahiers du C.E.R.V.I.A.

haubans fils de soie. ils sont fonctionnels

silk thread. they are functional

marginal 15/10 profilé

dièdre 10 mm

0,5 x 1,5

1,5 x 1,5

15/10

5/10

15/10

1 x 2

1618

1621

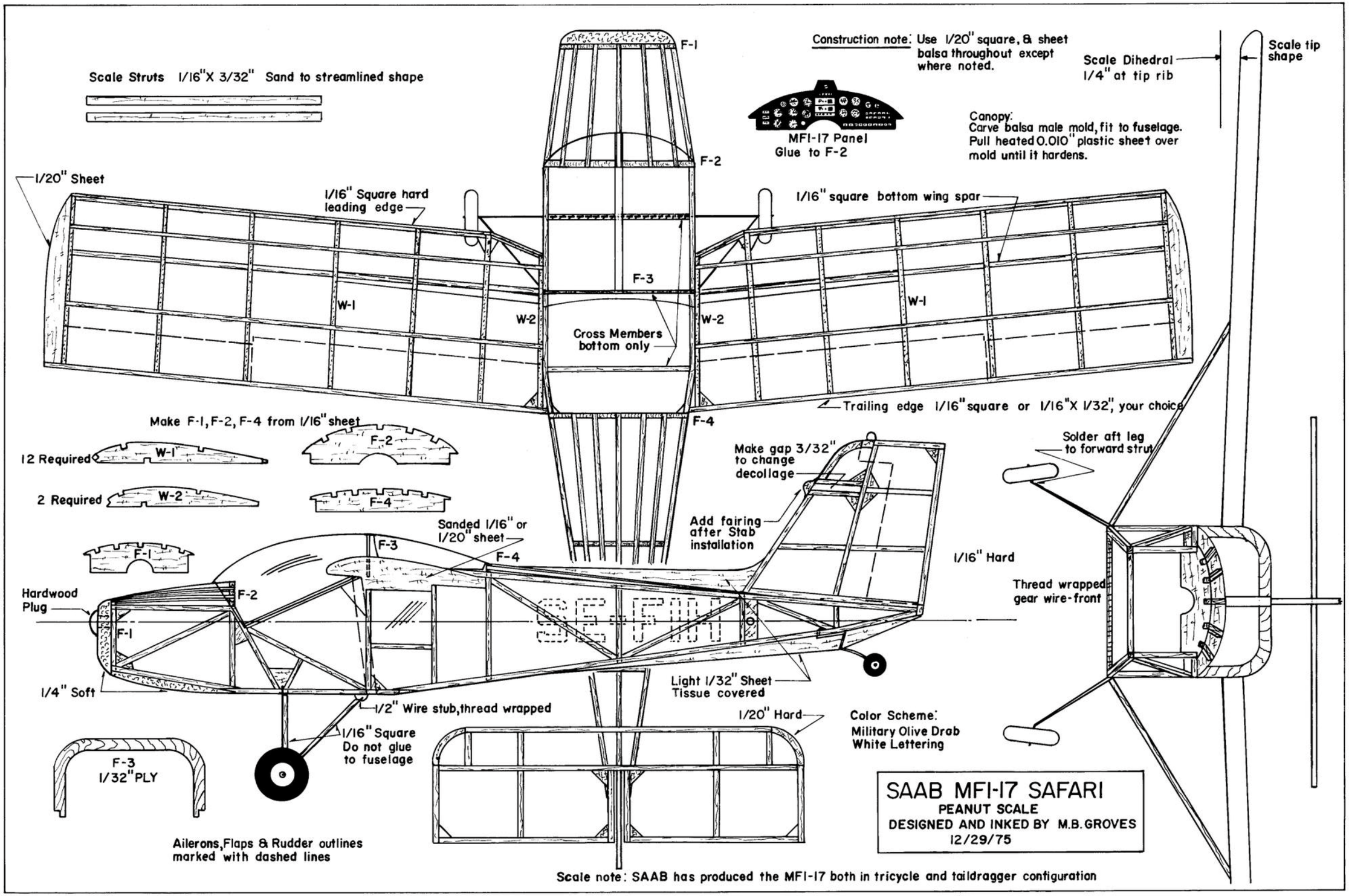
Scale Struts 1/16"X 3/32" Sand to streamlined shape
F-1
F-2
F-3
F-4
Construction note: Use 1/20" square, & sheet balsa throughout except where noted.
Scale Dihedral 1/4" at tip rib
Scale tip shape
MFI-17 Panel Glue to F-2
Canopy: Carve balsa male mold, fit to fuselage. Pull heated 0.010" plastic sheet over mold until it hardens.
1/20" Sheet
1/16" Square hard leading edge
1/16" square bottom wing spar
W-1
W-2
Cross Members bottom only
Trailing edge 1/16" square or 1/16"X 1/32", your choice
Make F-1, F-2, F-4 from 1/16" sheet
12 Required
2 Required
Make gap 3/32" to change decollage
Add fairing after Stab installation
Solder aft leg to forward strut
Sanded 1/16" or 1/20" sheet
1/16" Hard
Thread wrapped gear wire-front
Hardwood Plug
1/4" Soft
Light 1/32" Sheet Tissue covered
1/2" Wire stub, thread wrapped
1/20" Hard
1/16" Square Do not glue to fuselage
Color Scheme: Military Olive Drab White Lettering
F-3 1/32" PLY
Ailerons, Flaps & Rudder outlines marked with dashed lines
SAAB MFI-17 SAFARI
PEANUT SCALE
DESIGNED AND INKED BY M.B. GROVES
12/29/75
Scale note: SAAB has produced the MFI-17 both in tricycle and taildragger configuration

Piece up TE and add ribs and gussets, notch tip for LE stock and spars, & assemble wing in the usual manner. round off tip after assembly. Build 1/16" washout into each tip.

Make tips of soft block and sand to airfoil shape; moving the 'foil uniformly out to the tips may help to avoid the tip stall Spitfires are prone to.

General Appointments shown; refer to source material for more. An intercooler radiator was added to the Griffon-powered planes, and shared the left scoop with the oil cooler. So the two scoops are identical.

1.05" Dihedral

Stripes & roundels top & bottom

Rib Slant

Color Separation

LE 1/16" sq.
TE 1/20"
Ribs 1/32" Tips 3/32"
Spars 1/20" sq.

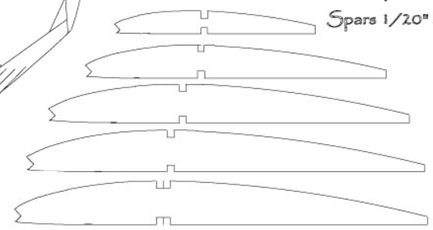

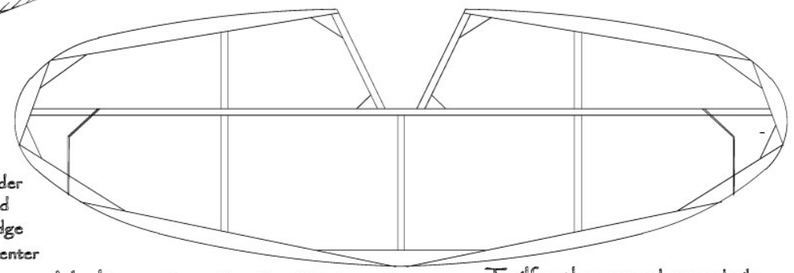

TE Filler 3/16"stk. —When setting dihedral, block up the wing to height and have some room under the center section. Lap-glue the spar as shown, and fashion a filler piece for the leading and trailing edge joints, to make a flat surface over the top in the center section. Then sand underneath to thickness.

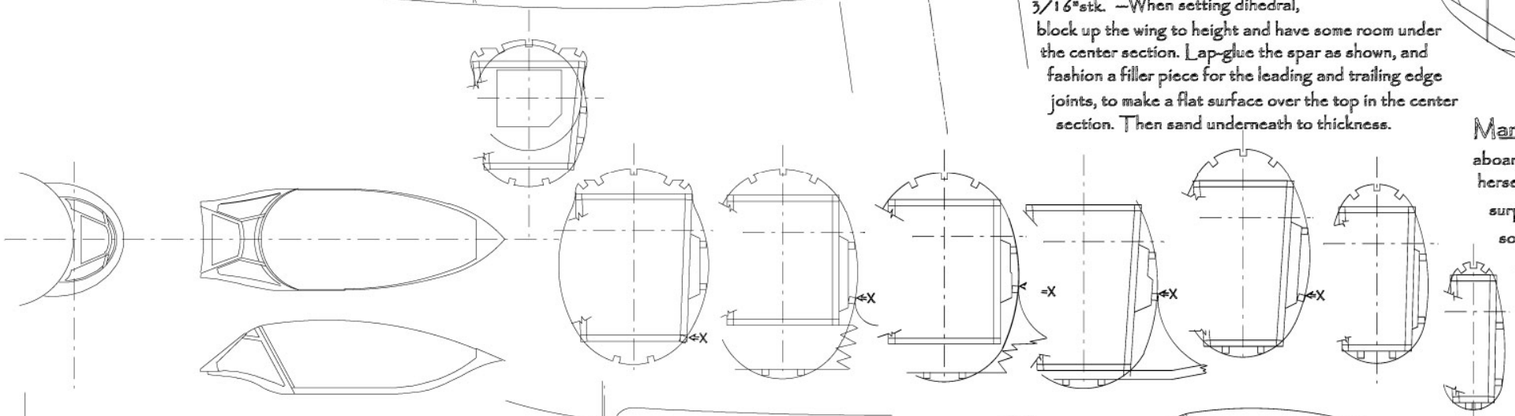

Markings show a plane from FAA 800Sqn. aboard HMS *Triumph* in 1950, when she found herself an unexpected guest at North Korea's little surprise party. Seafires flew combat patrols and some rail strikes between July and September. Stripes were applied to the planes after one was shot down by a nervous American B-29 crew. Colors are Extra Dark Sea Grey over Sky, and white stripes.

Tailfeathers are shown as built with 1/20" stock and with flat stock a nominal 1/20"x1/8" strip size. As always, you might vary the construction based on your taste and the interests of lightness.

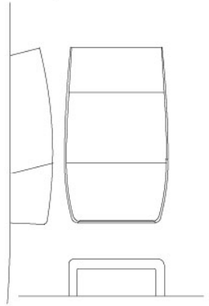

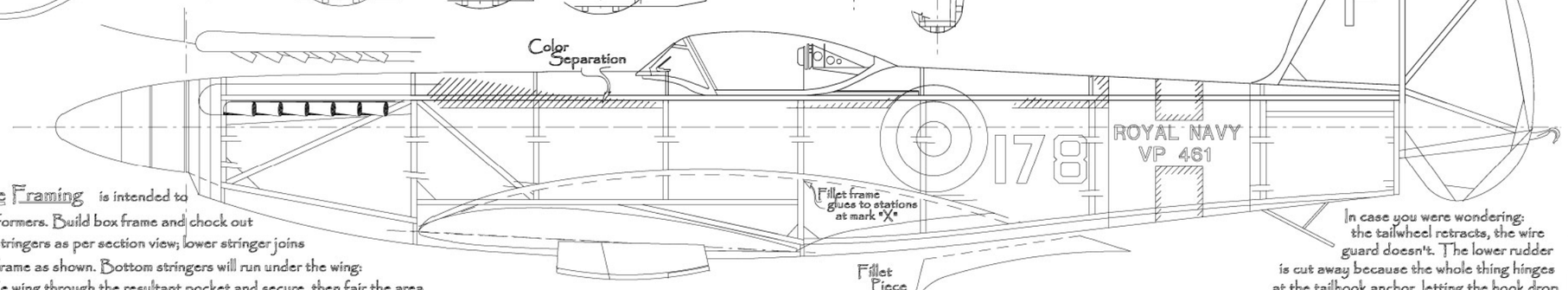

Fuselage Framing is intended to use fewer formers. Build box frame and chock out for side stringers as per section view; lower stringer joins fillet frame as shown. Bottom stringers will run under the wing: slide wing through the resultant pocket and secure, then fair the area with your favorite material.

In case you were wondering: the tailwheel retracts, the wire guard doesn't. The lower rudder is cut away because the whole thing hinges at the tailhook anchor, letting the hook drop at landing. The hook telescopes out nearly twice its stowed length.

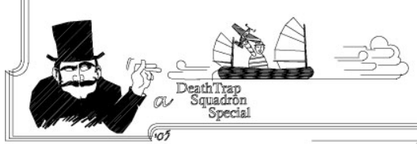

Peanut Scale
Seafire Mk47

& Rockland F. Russo
Michael J. Heinrich

"...The problem was solved simply by ignoring it..."

SMĚR VLÁKEN BALSY

B - BALSA , PŘ - PŘEKLIŽKA

BA - BAMBUS , OC - OCELOVÁ STRUNA Φ

PT - PAPÍROVÁ TRUBIČKA Φ

OE-WYJC

P100 TS N°01

MODEL KATEGORIE M-OŘ

POTTIER P 100 TS