WHAM

NEWS, VIEWS, and REVIEWS

Official Publication of the
Wichita Historical Aircraft Modelers, SAM 56, and
the Kansas Sunflower Squadron, FAC Squadron #23

Sunflower Squadron
Wichita, KS

Issue JE2-23
March, 2025

Cylindrical Cam for Free Wheeler Props

Here is yet another design to provide a way to fit andutilize the free wheeler cam on the front of the Peck and other plastic propellers that we use on our models.

Take a length of aluminum round rod stock of 1/4" for the Peck prop, and 5/16" for the orange Chinese prop, and leave it at a full length of a minimum of 4" in order to be able to hold on to it. In a lathe or drill press, drill a center hole in one end of the size of your propshaft about 1/2" deep. Mount the piece firmly in a vise with the end with the hole in it pointing upward. Now take your favorite fine file and file a spiral ramp and stop to match the cam on the front of your chosen prop. Don't file the alum. cam face in reverse, as I have done on two occasions.

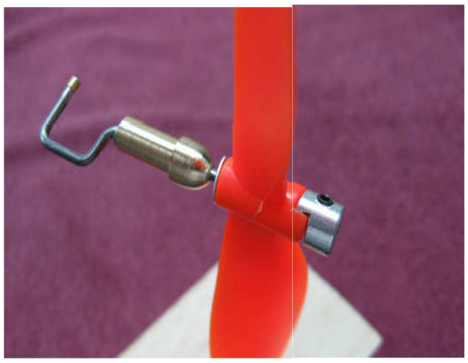

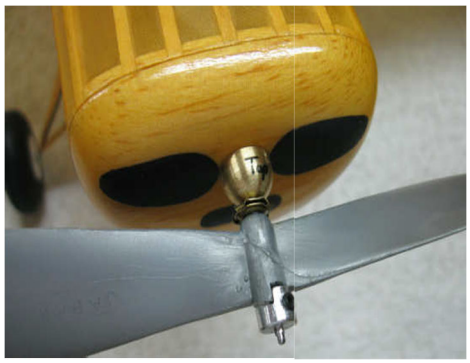

Think it out before you start. File the cam-step-stop in the alum. rod first. Then file the spiral down using the prop to check your profile work as you go. Your first try will take a while but as you gain experience you will get the hang of it and be able to make the part faster. When you have mastered the engagementprofile you can now drill a set screw hole in the side inthe middle of what will be about a 1/4" part length.
Now tap it for a threaded set screw of 4-40 or 5-40 to fasten it on a ground flat on the prop shaft. The set screw from a Du-Bro wheel collar works well here. When done cut the part off to a over all lengthof 1/4".

When mounted on the prop shaft on the model, merely leave enough fore and aft movement of the prop to just miss the cam and allow it to free wheel when the power is exhausted. The main advantageof this system is that one can disassemble and re- place the prop shaft if bent, or the prop in the field. You can use a bobbin or a Crockett hook for wind- ing the rubber motor, maybe an "O" ring would work OK. A "Z" bend prop shaft however would require you to remove and wind the rubber motor bare handed and is not recommended.

One very good source for aluminum rod stock of any size is McMaster-Carr. Google this for site info.

Bill Schmidt

January 25, 2025 Meeting Minutes

ATTENDEES:
Jeff Englert, Regina & Marty Kline, Linda & Chuck Powell, David O'Reilly, Kent Peters, Marlene Hayes & Ed Salguero, Marilyn & Bill Schmidt, Dave Wiebe, and Luke Wiebe

President Powell called the meeting to order; Minutes were approved as delivered.

Treasurer's report reported a positive balance.

OLD BUSINESS:

Talked about upcoming contests.

NEW BUSINESS:

Talked about our Spring contest at Marion (May 4 -5th) (rain date a week later).

Indoor contest possible in February.

SHOW AND TELL:

Chuck Powell showed some kits, Testor's props. One was Jasco Thermal Cruiser.

Ed Salguero displayed his plan built Scientific Ensign. A 1940's free flight design. RC assist for SAM events, uses a OSmax 15.





Jeff Englert showed his new YoHo and Pogo planes. Both are 1/2A gas designs, the Pogo from the September 1956 issue of Flying Models. It was built from a prize kit awarded to someone back in the sixties. No idea how I acquired it. The YoHo is from the October 1955 FM issue. It is being kitted by J&H Hobbies. Really simple design intended as an entry level 1/2A plane.








Bill Schmidt brought in his North American SNJ-5 built from an old FAC plans packet. He stated it is pretty close to scale.





Dave Wiebe showed his PA-11 built from Bill Schmidt's plans.





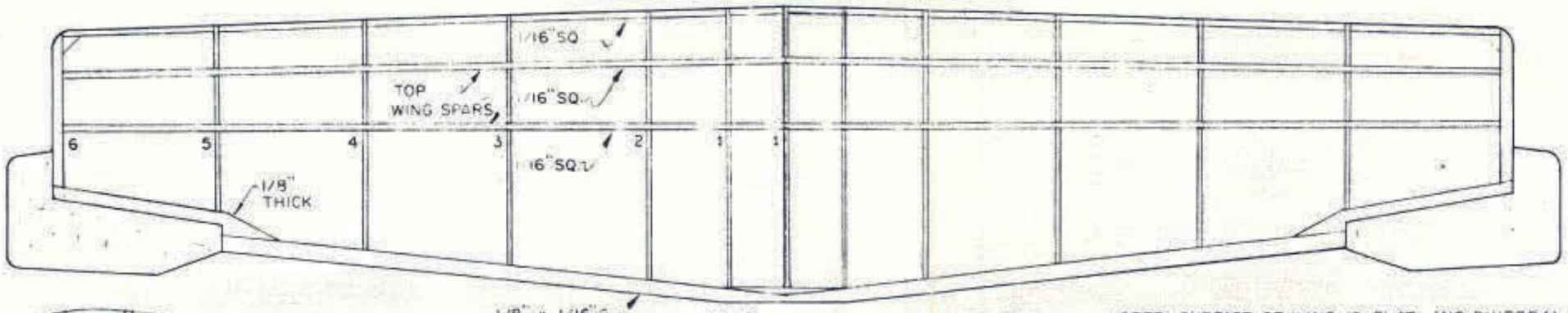

WING

BUILD WING OUTLINE AND RIBS FLAT ON BUILDING BOARD.

AFTER ASSEMBLY HAS DRIED, BLOCK UP WING TIPS TO CORRECT HEIGHT AND INSTALL TOP WING SPARS.

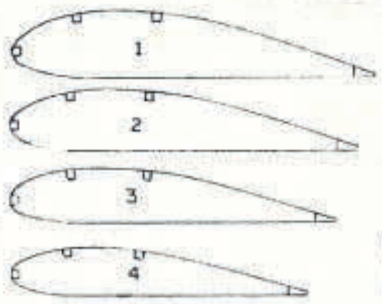



WING RIBS

1/32" SHEET EXCEPT #6

UPPER SURFACE OF WING IS FLAT (NO DIHEDRAL)

THE FOKKER F11 WILL FLY INDOORS IF CAREFULLY TRIMMED. IT IS, HOWEVER ONLY MARGINALLY STABLE, AND IS SUSCEPTIBLE TO UPSETTING BY GUSTS.

FOR OUTDOOR FLYING, I RECOMMEND 1/2" DIHEDRAL (EACH TIP) AND THE INDICATED ENLARGED RUDDER

1/32 = 0.8
1/16 = 1.6
1/8 = 3.2

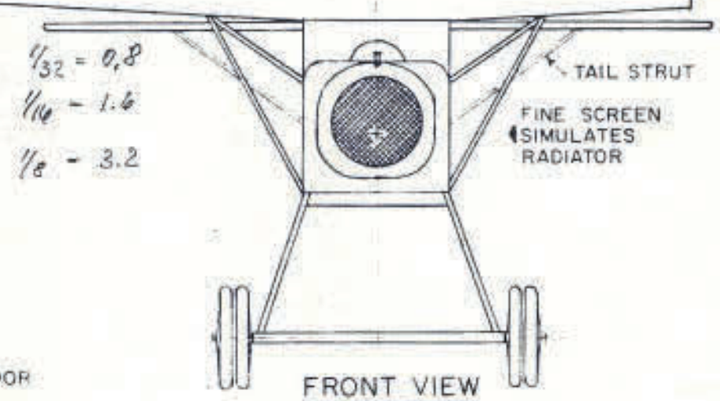

FRONT VIEW



FUSELAGE TOP VIEW

SUGGESTED OUTDOOR RUDDER OUTLINE

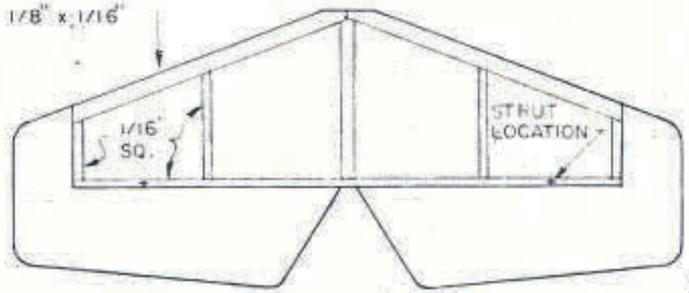

HORIZONTAL TAIL

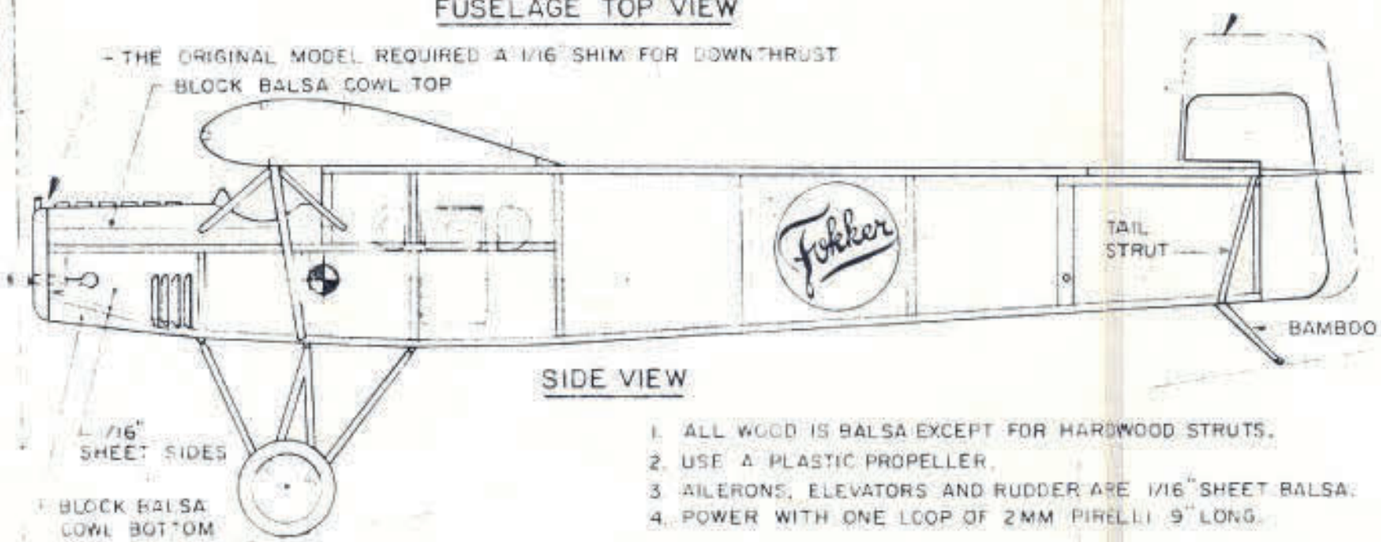

SIDE VIEW

1. ALL WOOD IS BALSA EXCEPT FOR HARDWOOD STRUTS.
2. USE A PLASTIC PROPELLER.
3. AILERONS, ELEVATORS AND RUDDER ARE 1/16" SHEET BALSA.
4. POWER WITH ONE LOOP OF 2MM PIRELLI 9" LONG.



PEANUT SCALE
© 1971 BY W.C. HANNAN

FOKKER F11 (1919)

12-30-69

MODELÁŘ · 9/1992 · 261

59985

YF-23A

M 1:1

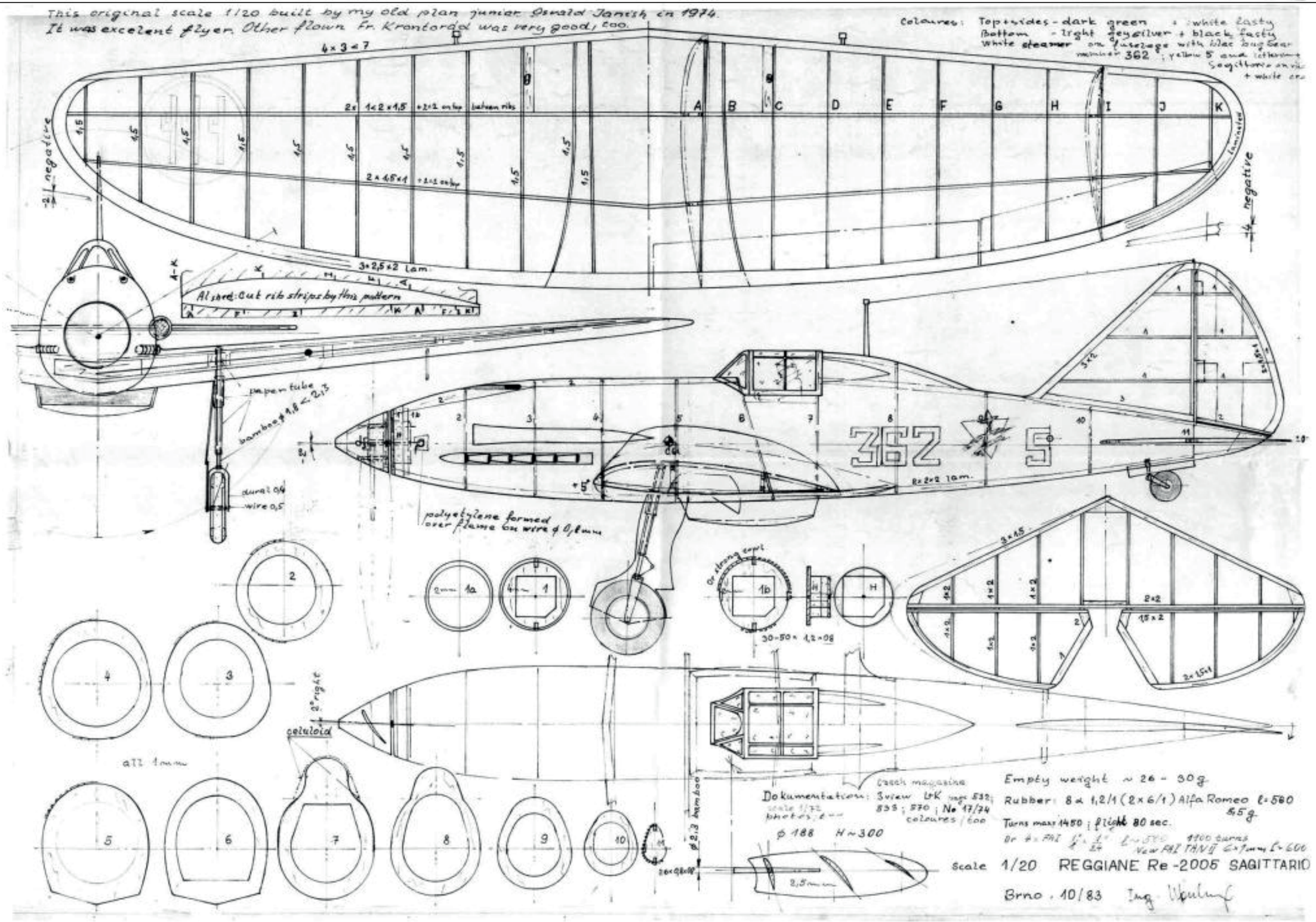
This original scale 1/20 built by my old plan junior Osvald Janish in 1974.
It was excelent flyer. Other flown Fr. Krontorád was very good, too.
Coloures: Top+sides - dark green + white fasty
Bottom - light geysilver + black fasty
White steamer on fuselage with blac bug bear
number 362 ; yellow 5 and letterin
Sagittario on ribs
+ white cro
4 x 3 x 7
2 x 1 x 2 x 1,5 + 2 x 2 on top between ribs
2 x 1,5 x 1 + 2 x 2 on top
3 x 2,5 x 2 lam.
A B C D E F G H I J K
negative
Al sheet: Cut rib strips by this pattern
paper tube
bamboo ø 1,8 x 2,3
dural 0,4
wire 0,5
polyetylene formed over flame on wire ø 0,8 mm
362 5
8 x 2 x 2 lam.
3 x 1,5
2 x 2
1,5 x 2
2 x 1,5 x 1
30-50 x 1,2 x 08
celuloid
all 1 mm
ø 2,3 bamboo
ø 188 H ~ 300
2,5 mm
Dokumentation: 3view LK page 532; 533; 570; No 17/74 coloures / 600
Empty weight ~ 26 - 30 g
Rubber: 8 x 1,2/1 (2 x 6/1) Alfa Romeo l = 580 5,5 g
Turns max 1450 ; flight 80 sec.
Scale 1/20 REGGIANE Re-2005 SAGITTARIO
Brno . 10/83

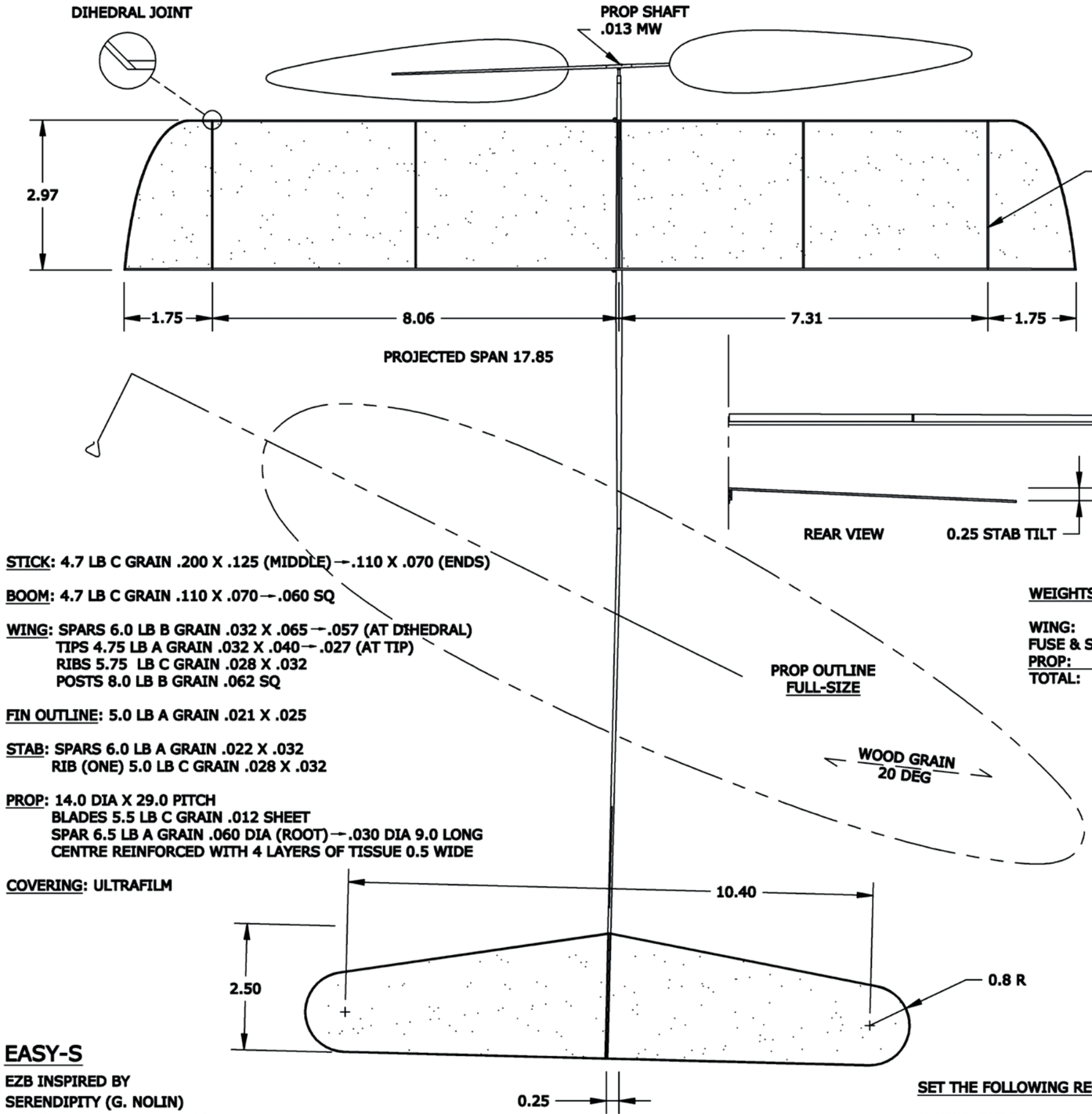

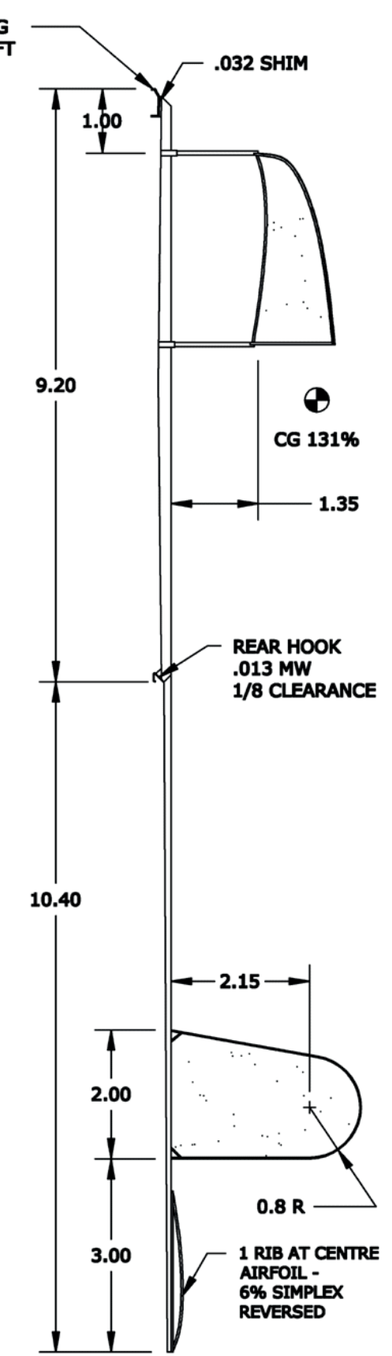

STICK: 4.7 LB C GRAIN .200 X .125 (MIDDLE) → .110 X .070 (ENDS)

BOOM: 4.7 LB C GRAIN .110 X .070 → .060 SQ

WING: SPARS 6.0 LB B GRAIN .032 X .065 → .057 (AT DIHEDRAL)
TIPS 4.75 LB A GRAIN .032 X .040 → .027 (AT TIP)
RIBS 5.75 LB C GRAIN .028 X .032
POSTS 8.0 LB B GRAIN .062 SQ

FIN OUTLINE: 5.0 LB A GRAIN .021 X .025

STAB: SPARS 6.0 LB A GRAIN .022 X .032
RIB (ONE) 5.0 LB C GRAIN .028 X .032

PROP: 14.0 DIA X 29.0 PITCH
BLADES 5.5 LB C GRAIN .012 SHEET
SPAR 6.5 LB A GRAIN .060 DIA (ROOT) → .030 DIA 9.0 LONG
CENTRE REINFORCED WITH 4 LAYERS OF TISSUE 0.5 WIDE

COVERING: ULTRAFILM

WEIGHTS:

WING:	0.26 GM
FUSE & STAB:	0.56 GM
PROP:	0.27 GM
TOTAL:	1.09 GM

EASY-S

EZB INSPIRED BY
SERENDIPITY (G. NOLIN)
DESIGNED BY W. HENDERSON
DRAWN BY P. KEARNEY 1-98

SET THE FOLLOWING RECORDS IN CANADA:

JUNIOR CAT IV 16:33 JUNE 2, 1989
JUNIOR CAT II 10:37 JULY 4, 1989

SCALE 3:1
(EXCEPT AS NOTED)

balsa 30/10

bloc vue face 1

bloc vue arrière 2

tube alu

ctp 10/10

2 x 5/10 + papier roulé fil en long

1 3

6,5

11mm

axe cap 7/10

coller

1 x 1,5 balsa dur profilé

10/10

10/10

15 10

15/10

1,5 x 1,5

position optionnelle de la broche

15/10

4 bambou 5/10

fil élastique

ligature

bambou

noir

vernis jaune

balsa dur : x1 profilé

hauban arrière

hauban avant

noir

gris clair

cap 5/10 + souplisseau

ligature fil

ligature élastique

Hélice : 120 mm max

cuivre
copper

noir

yellow varnish
vernis jaune

black
noir

VUE DESSUS

5/10

longerons noirs

VUE DESSOUS

5/10

noir

1913-2013

Centenaire de la traversée de la Méditerranée

Concours postal "Les Cahiers du CERVIA"

Morane - Saulnier type H

Les cahiers du C.E.R.V.I.A.

haubans fils de soie. ils sont fonctionnels
silk thread. they are functional

marginal 15/10 profilé

0,5 x 1,5

1,5 x 1,5

15/10

5/10

15/10

1 x 2

dièdre 10 mm

1618

1621

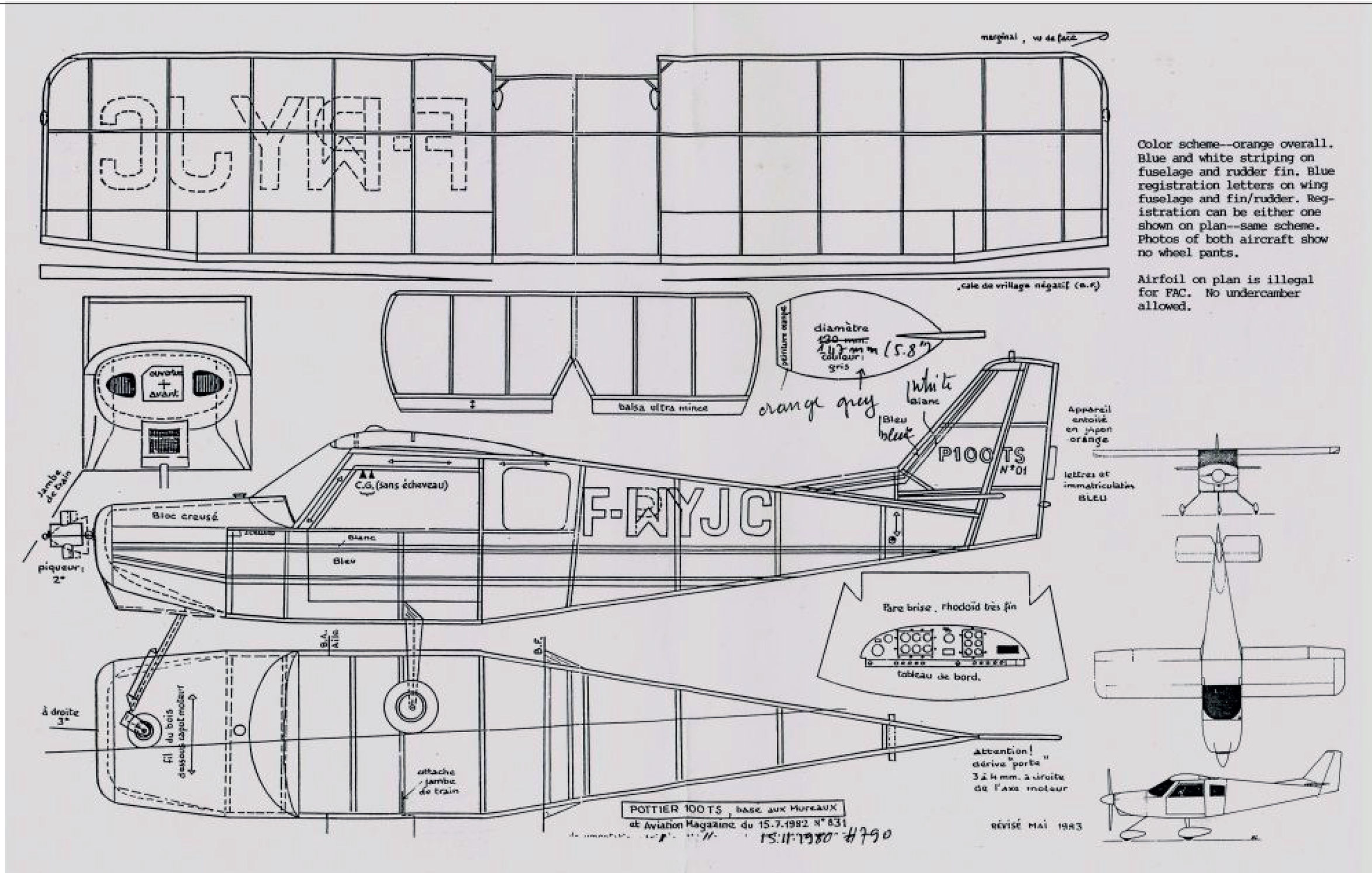

Color scheme--orange overall. Blue and white striping on fuselage and rudder fin. Blue registration letters on wing fuselage and fin/rudder. Registration can be either one shown on plan--same scheme. Photos of both aircraft show no wheel pants.

Airfoil on plan is illegal for FAC. No undercamber allowed.

WHAM – News, Views, and Reviews

Jeff Englert
10118 Sterling Court
Wichita, KS 67205

The next SAM 56 Dinner Meeting will be at:

Mediterranean Grill

335 S Towne East Mall Dr., Wichita, KS 67207
(316) 651-5599
Saturday, March 22, 2025
Social Hour @ 6:00 PM, Dinner @ 6:30 PM...

Upcoming events:

Membership Information:

Open to all interested AMA members, founded to encourage and promote model airplane building.
Member dues $20 annually, Subscription only; $12 annually, $18 foreign.

Club Officers:

President: Chuck Powell,	Vice-President: Bill Schmidt
Treasurer: Phil Burress,	Secretary: Jeff Englert, 722-7491